EMERGENCY VEHICLE

LIGHTS & SIRENS

armas

LIGHTBARS

INFINITY-L

The lightbar INFINITY-L is a next generation and innovative lightbar. The idea behind the product is identical to all in one concept. Lots of cutting edge technologies have been integrated into the product. INFINITY-L is offered with 4-color LED technology and smart chip printed LED modules. The specially designed and patented magnifying lenses facilitate fulfilling warning and illumination role efficiently and powerfully. The high durability of the lightbar originates from its aluminum structure and chassis, and UV and impact proof polycarbonate materials. The lightbar is available in various length and plastic color optiions.

- 360 of visual warning with powerful multicolor LEDs (red, blue, amber and white) in single LED chips
- Various LED quantities
- Dual levels of LED modules
- 360 degrees of illumination with white takedown and alley lights (optional)
- Traffic advisor features
- Traffic cleaning feature with strong sound and light source
- Notification of faulty warning LEDs on the screen of e-SRC control unit
- Programmability (optional)
- Automatic and manual day/night light intensity control
- Feature of turning off rear flashing LED modules
- Multiple flashing patterns
- Aerodynamic and thin neodymium speaker

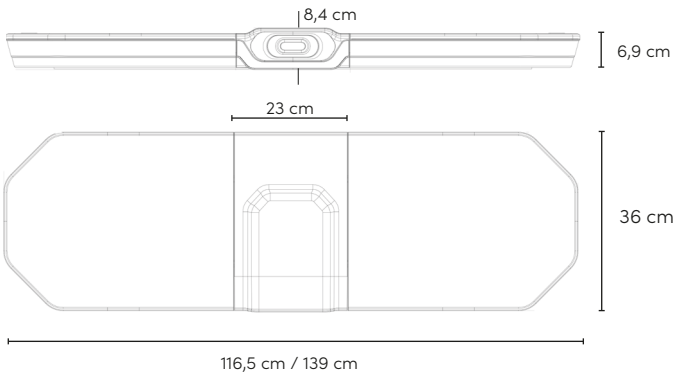

INFINITY-LS

The lightbar INFINITY-LS is a distinctive lightbar with its aesthetic and aerodynamic design and high functionality among competitors. The up-to-date technologies have been united and implemented in the development and production of the product. The specially designed and patented magnifying lenses facilitate fulfilling warning and illumination role efficiently and powerfully. The aluminum structure and UV and impact resistant polycarbonate materials are used to increase the durability of the product. The lightbar is available in various length, LED and plastic color optiions.

- 360 of visual warning with powerful LEDs
- Various LED quantities
- Dual levels of LED modules
- 360 degrees of illumination with white takedown and alley lights (optional)
- Traffic advisor feature (optional)
- Traffic cleaning feature with strong sound and light source
- Programmability (optional)
- Automatic and manual day/night light intensity control
- Feature of turning off rear flashing LED modules
- Multiple flashing patterns
- Aerodynamic and thin neodymium speaker

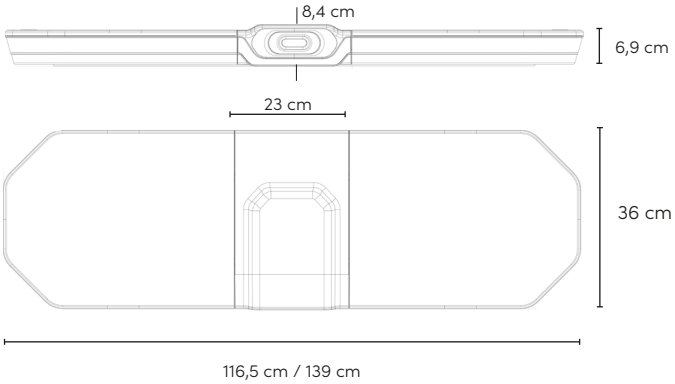

INFINITY-M

The lightbar INFINITY-M is the most functional lightbar in the sector. The idea behind the product is identical to all in one concept. Lots of cutting edge technologies have been integrated into the product. Using programmable feature and 4-color LED technology and smart chip printed LED modules the users may program the flashing patterns and colors of LEDs to meet their needs. The specially designed and patented magnifying lenses facilitate fulfilling warning and illumination role efficiently and effectively. The aluminum structure, UV and impact resistant polycarbonate materials make the lightbar highly durable. The lightbar is available in various length and plastic color optiions.

- Effective visual warning with powerful multicolor LEDs (red, blue, amber and white) in single LED chips
- Various LED quantities
- Dual levels of LED modules
- 360 degrees of illumination with white takedown and alley lights (optional)
- Traffic advisor features
- Traffic cleaning feature with strong light source
- Notification of faulty warning LEDs on the screen of e-SRC control unit
- Programmability (optional)
- Automatic and manual day/night light intensity control
- Feature of turning off rear flashing LED modules
- Multiple flashing patterns

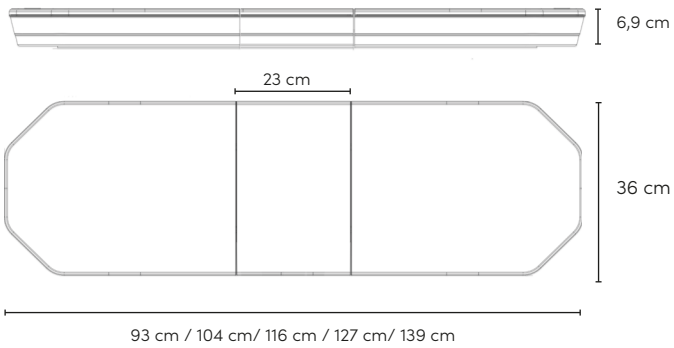

INFINITY-S

The lightbar INFINITY-S is a lightbar combining functionality, aesthetics and physical durability. The lightbar is thin and aesthetically designed to nicely locate strong flashing LED modules on the upper level and takedown and alley LED modules on the lower level. The specially designed and patented magnifying lenses facilitate fulfilling warning and illumination role efficiently and powerfully. The use of aluminum structure and UV and impact resistant polycarbonate materials has increased the durability of the product. The lightbar is available in various length and plastic color optiions.

- Various LED quantities
- Dual levels of LED modules
- 360 degrees of illumination with white takedown and alley lights (optional)
- Traffic advisor feature (optional)
- Traffic cleaning feature with strong light source
- Programmability (optional)
- Automatic and manual day/night light intensity control
- Feature of turning off rear flashing LED modules
- Multiple flashing patterns

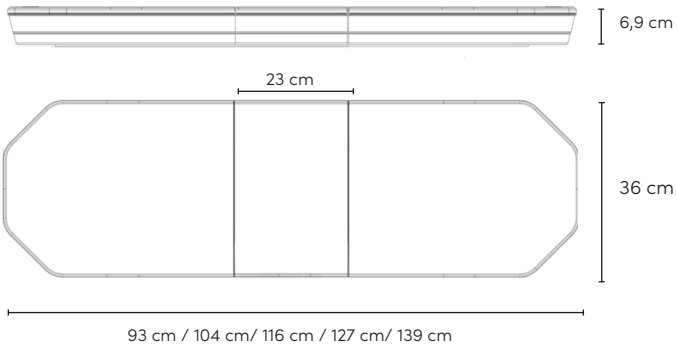

SPARK- L

The lightbar SPARK-L is a robust and functional product suitable to utilize under various conditions and areas of application. The body of product is manufactured of UV and impact proof polycarbonate and aluminum structure. SPARK-L has an effective cooling system which is crucial for the lifespan and performance of the LED technology which in turn ensures the quality warning feature of the lightbar along with specially designed lens. The lightbar is equipped with a speaker of powerful sound intensity thanks to the low impedance neodymium magnet in the center of the lightbar.

- Various length options
- Various colors of LED and plastic parts
- Various LED quantities
- Multiple flashing patterns
- White takedown, alley lights (optional)
- Feature of auto day/night LED intensity (optional)
- Feature of turning off rear flashing LED modules (optional)

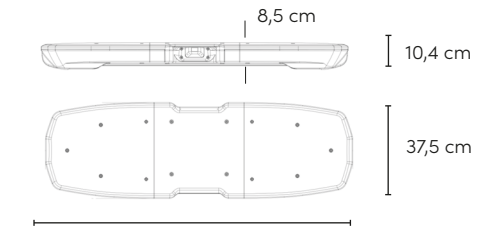

114 cm / 123 cm / 137 cm / 145 cm / 165 cm

SPARK-ML

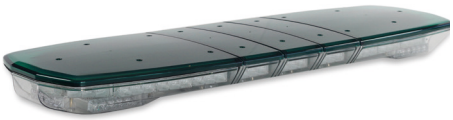

The lightbar SPARK-M is a lightbar with easy to use control system, which is suitable to utilize under various weather and environment conditions and areas of application. The product is manufactured of highly durable UV and impact proof polycarbonate and aluminum structure. Thanks to the specially designed lens of LED module efficient and effective warning light is produced. The lifespan and performance of the LED technology are enhanced with the well designed and quality aluminum chassis inside the lightbar.

- Various length options
- Various colors of LED and plastic parts
- Various LED quantities
- Multiple flashing patterns
- White takedown, alley lights (optional)
- Feature of auto day/night LED intensity (optional)
- Feature of turning off rear flashing LED modules (optional)

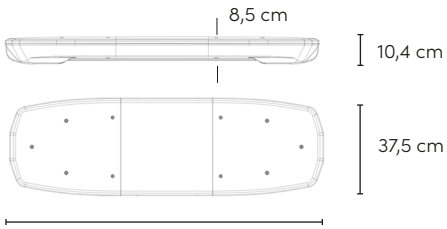

86 cm / 97 cm / 109 cm / 121 cm / 132 cm
145 cm / 167 cm

SPARK-MS

The lightbar SPARK-MS is a warning lightbar offered with illuminated logo area in the center of the product. The product has a user friendly control system. The UV and impact resistant polycarbonate and robust aluminum base strengthen the lightbar to stand against the difficult weather conditions and areas of use. Thanks to the specially designed lens of LED module efficient and effective warning light is produced. The lifespan and performance of the LED technology are enhanced with the well designed and quality aluminum chassis inside the lightbar.

- Various length options
- Various colors of LED and plastic parts
- Various LED quantities
- Multiple flashing patterns
- White takedown, alley lights (optional)
- Feature of auto day/night LED intensity (optional)
- Feature of turning off rear flashing LED modules (optional)

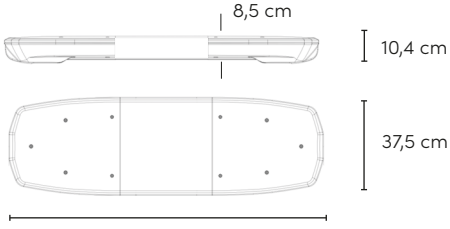

86 cm / 97 cm / 109 cm / 121 cm / 132 cm
145 cm / 167 cm

FLARE

The lightbar FLARE is a low profile lightbar with slim design. The product is the first winner of RedDot Design Award for the best design in the sector. The LED module cards on which the LEDs are evenly distributed are nicely placed in the canals of strong and durable monoblock aluminum body and covered with UV and impact proof polycarbonate plastic parts. The high durability, convenient connection and easy control and modern design enable the lightbar to satisfy the needs and requirements of various sectors.

- Various length options
- Various colors of LED and plastic parts
- Various LED quantities
- Multiple flashing patterns
- Feature of turning off front and rear flashing LED modules (optional)

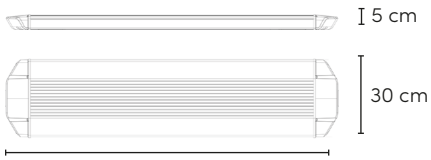

35 cm / 51 cm / 61 cm / 81 cm
110 cm / 114 cm / 123 cm / 145 cm
160 cm / 180 cm

FLARE-MS

The lightbar FLARE-MS is a low profile lightbar with slim design. The lightbar is an ideal product which is offered with illuminated logo area in the center of the product. The product is manufactured of shock and UV resistant polycarbonate and hardened mono block aluminum. Thanks to the specially designed lens the power light originating from the power LEDs is effectively distributed. The high durability, convenient connection and easy control and aesthetic design enable the lightbar to satisfy the needs and requirements of various sectors

- Various length options
- Various colors of LED and plastic parts
- Various LED quantities
- Multiple flashing patterns
- Feature of turning off front and rear flashing LED modules (optional)

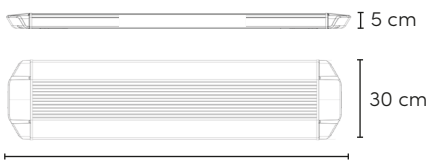

35 cm / 51 cm / 61 cm / 81 cm
110 cm / 114 cm / 123 cm / 145 cm
160 cm / 180 cm

MEMED

The lightbar MEMED is a low profile and of thinnest lightbars. The product is well designed to be mountable in the front-back or back-front form. Each mounting form gives a unique view. The lightbar body is manufactured of shock and UV proof polycarbonate and hardened monoblock aluminum structure. The high power LEDs and quality optical lenses mounted to the LED cards enable to generate powerful light intensity. The high durability, convenient connection and easy control and modern design enable the lightbar to satisfy the needs and requirements of various sectors.

- Various length options
- Various colors of LED and plastic parts
- Various LED quantities
- Multiple flashing patterns
- Feature of turning off front and rear flashing LED modules (optional)

32 cm / 47 cm / 78 cm / 111 cm
120 cm / 142 cm / 157 cm / 177 cm

VOLTRON

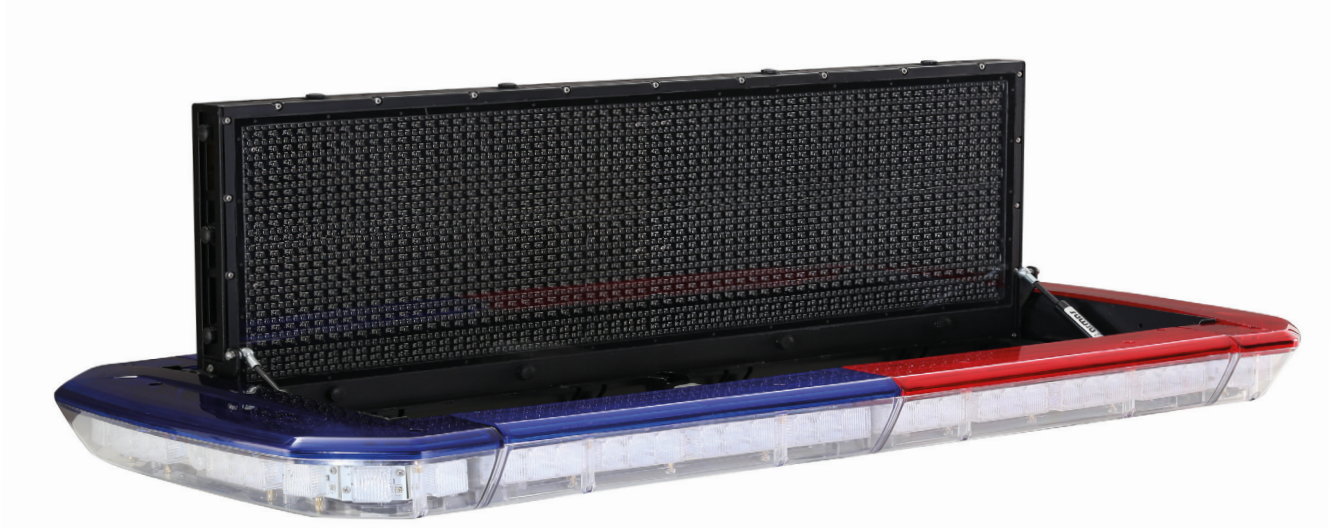

The lightbar is a combination of emergency warning system and digital message panel. The panel shuts down into the lightbar and opens to 90°. The panel is available in single or double sided. And the messages can be mirrored to be easily read on the rearview mirror. Two message size options are available, the double line messages in smaller letter size or single line messages in large letter size. Any symbol, sign or desired message and the messages which are previously saved can be displayed on the digital message panel using the control unit. The panel may have an optional smart function of automatic shutting sensitive to the speed of the vehicle. Thanks to the strong mechanical structure the digital message panel can easily open and close at high speed. The product is highly durable against speed, rain, low and high temperature thanks to its aluminum structure and UV and impact proof polycarbonate plastic parts.

Various colors of LEDs and plastic parts
Various colors of LEDs of digital message panel
Availability of alley light
Multiple flashing patterns
Handy control unit with display
Simulation on the display of control unit
Various messaging options
Easy mounting and connection

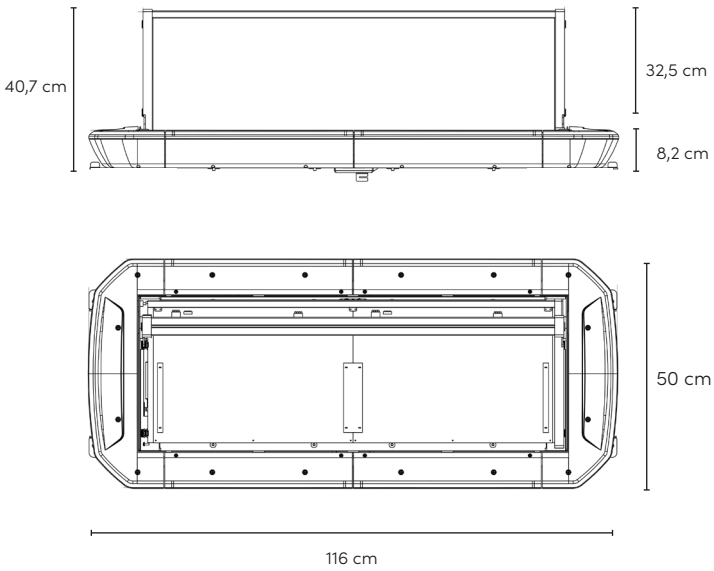

BEACON & MAGNETIC WARNING LIGHTS

MCL

MCL is a mini size warning LED beacon light with UV and impact resistant polycarbonate body. The product is equipped with high power LEDs which are efficient and at the same time produce bright and strong light intensity. The beacon is offered in 6, 12 and 18 LEDs alternatives and in various color options. Optionally, magnetic mounting option is offered in addition to standard screw based mounting.

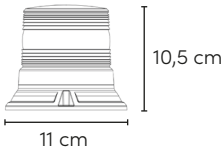

SCL

SCL is a medium size warning LED beacon light. The body is made of UV and impact resistant polycarbonate which allows using the product in all fields without any hesitation. The product is equipped with high power LEDs which are efficient and at the same time produces bright light intensity. The beacon is offered in 6, 12 and 18 LEDs alternatives and in various color options. Optionally, magnetic mounting option is offered in addition to standard screw based mounting.

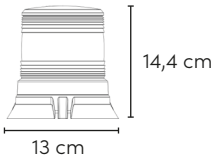

BCY

BCY is a large size warning LED beacon light with high power LEDs which are efficient and effective in warning. The body of beacon is made of UV and impact resistant polycarbonate which allows using the product in all fields without any hesitation. The beacon is offered in 6, 12 and 18 LEDs alternatives and in various color options.

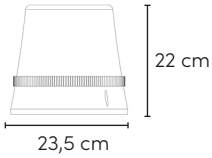

magneMCL

magneMCL is a magnetic mini size warning LED beacon light with UV and impact resistant polycarbonate body. The product is equipped with high power LEDs which are efficient and at the same time produce bright and strong light intensity. The beacon is offered in 6, 12 and 18 LEDs alternatives and in various color options.

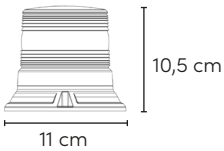

magneSCL

magneSCL is a magnetic medium size warning LED beacon light. The body is made of UV and impact resistant polycarbonate which allows using the product in all fields without any hesitation. The product is equipped with high power LEDs which are efficient and at the same time produces bright light intensity. The beacon is offered in 6, 12 and 18 LEDs alternatives and in various color options.

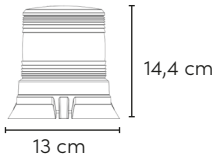

magnePULSE

magnePULSE is a magnetic teardrop LED beacon light. Thanks to the successful aerodynamic design and strong neodymium magnets the beacon is resistant to high speed. The body of beacon is made of UV and impact resistant polycarbonate. The beacon is offered in 6, 12 and 18 LEDs alternatives and in various color options.

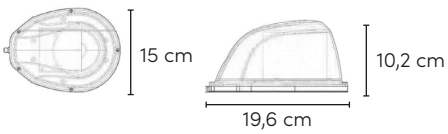

MINI WARNING LIGHTS

microPULSE

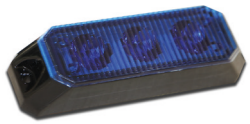

microPULSE is a 3-LED strobe light. Thanks to its slim and mini size, the product is easily mounted in the difficult to mount areas of the grille and on the surface of the vehicle. Availability of various colors perfectly matches to use in different fields. The strobe light is equipped with specially designed lens to produce highly intense light effect. The product is passive and controlled by an external flasher unit.

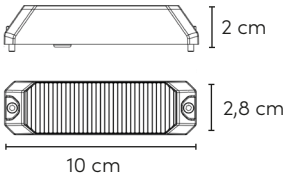

miniPULSE

miniPULSE is a 3-LED strobe light that is conveniently mounted to the front part and behind the grille and on the surface of the vehicle. Availability of various colors perfectly matches to use in different fields. Thanks to its specially designed lens the highly intense light effect is produced. The product is passive and controlled by an external flasher unit.

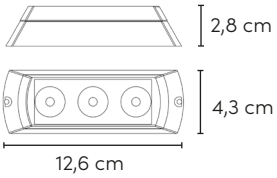

midiPULSE

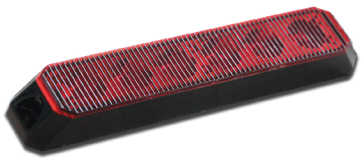

midiPULSE is a 6-LED strobe light. The light has been successfully designed to easily mount to the front part and behind the grille and on the surface of the vehicle. Availability of various colors perfectly matches to use in different fields. midiPULSE plays an effective role in warning thanks to its specially designed lens and 6-LED structure. The product is passive and controlled by an external flasher unit.

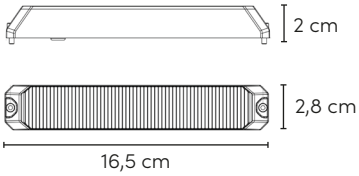

maxiPULSE

maxiPULSE is a 12-LED strobe light that effectively fulfills warning role from the grille and the surface of the vehicles. The product is conveniently used in different fields owing to available color alternatives and combination of two colors. The product is passive and controlled by an external flasher unit.

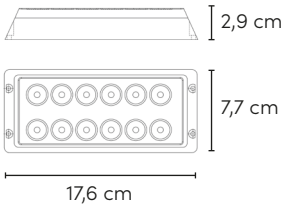

PULSE

PULSE is a 6-LED surface mount strobe light that is ideal and powerful warning light to mount on the surface of the vehicle. The produced intense light is well scattered with fresnel surface of the product. The variety of color alternatives is available. The product is passive and controlled by an external flasher unit.

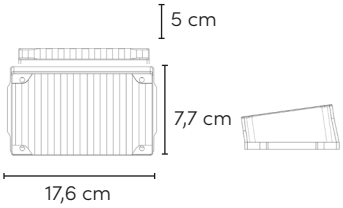

pulse-XL

PULSE-XL is a 12-LED surface mount strobe light. The large size and chrome plated edge provide glossy look and evenly printed 12 pcs of LEDs play effective role in warning. The strobe light is offered in variety of color alternatives. Its fresnel surface increases the distribution of the light. The product is passive and controlled by an external flasher unit.

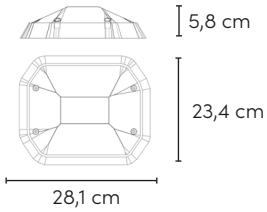

SPARK-M

SPARK-M is an ideal product for small vehicles and rear parts of the ambulance vehicles. The polycarbonate plastic parts, aluminum structure and quality electronic components make the product durable. The mini lightbar is optionally offered with upper takedown light to illuminate the area of stretcher. SPARK-M is offered in various length, LED and plastic color alternatives.

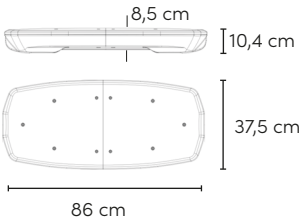

FLARE-M

FLARE-M is a low profile and world's first reddot design awarded product. The body of mini lightbar is manufactured of polycarbonate plastic and monoblock aluminum structure. FLARE-M is offered in various length, LED, plastic color alternatives and magnetic mount with cigarette plug and optionally permanent mounting.

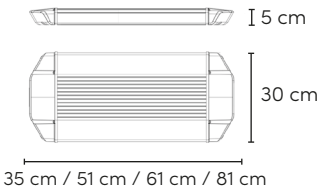

MEMED-M

MEMED-M is a light weight, portable and thin mini lightbar. The durability of product is complemented with quality monoblock aluminum structure, polycabonate plastic and latest components. MEMED-M is offered in various length, LED, plastic color alternatives and magnetic mount with cigarette plug and optionally permanent mounting.

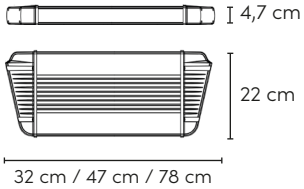

miniBUG

miniBUG is a powerful 6-LED hide-a-way strobe light that is mounted into the head or tail light. The hide-a-way light is offered in variety of color options. The metal structure of the light allows fast cooling in the closed space. The product is passive and controlled by an external flasher unit.

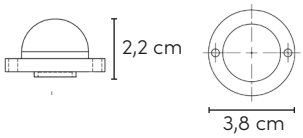

LINEAR

The aluminum structured LINEAR is offered in variety of length size, LED numbers and colors. Thanks to its lens with specific design, it creates an effective light intensity. The product is designed for interior mounting. The product is passive and controlled by an external flasher unit.

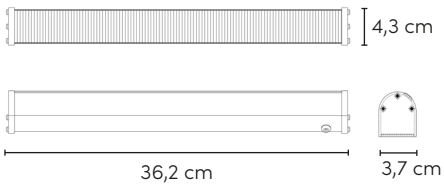

LINEAR-C

The aluminum structured LINEAR-C is COB LED linear strobe light that is offered in a variety of length size, LED numbers and colors. Thanks to its lens with specific design and high power COB LEDs, incomparable light power is created. The product is uniquely designed to easily mount on the surface and grille of the vehicle. The product is passive and controlled by an external flasher unit.

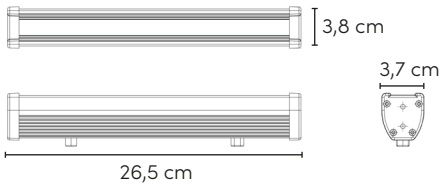

MOTORCYCLE WARNING SYSTEM

pulse-T

pulse-T is a motorcycle pole light with telescopic feature, adjustable height, illumination of 360 degrees. The product is offered in various color alternatives.

- Effective warning light with highly efficient power LEDs
- UV and impact resistance optical polycarbonate lens in variety of color options
- High luminous intensity with specially designed lens
- Adjustable telescopic aluminum structure
- Current and voltage limiting circuit
- Multiple flashing patterns
- Passive, controlled by external flasher or motorcycle cycle siren devices, EXPERT-WM, EXPERT-M

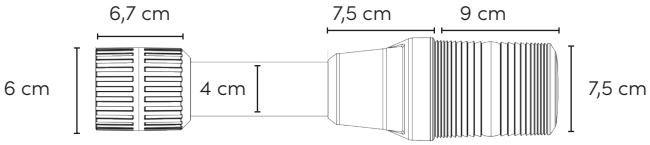

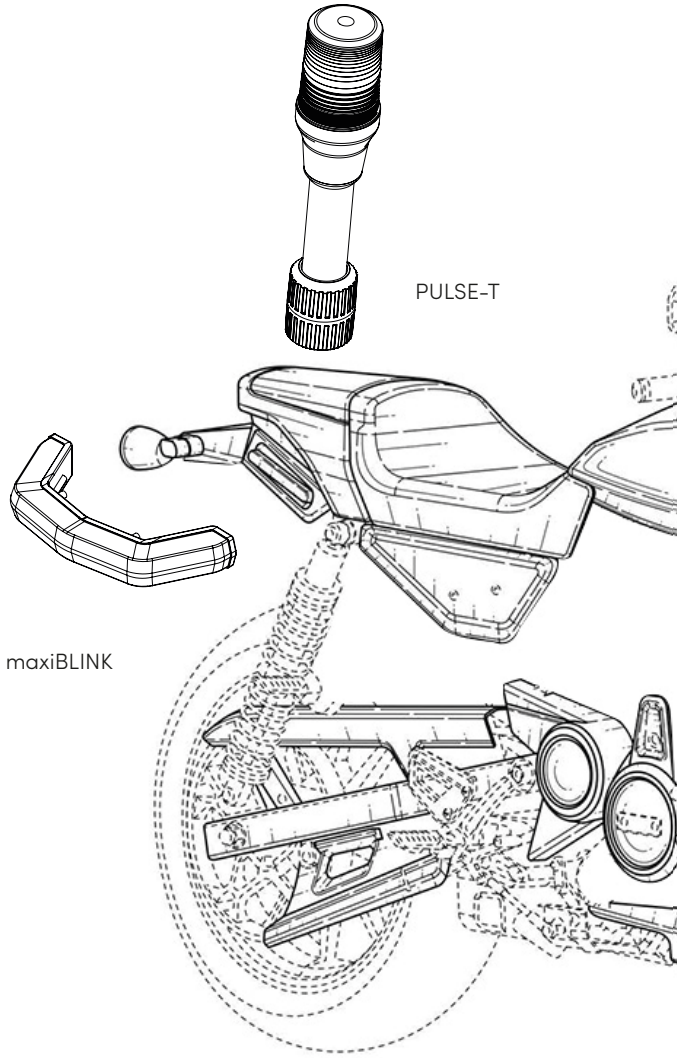

maxiBLINK

maxiBLINK is a motorcycle warning light that is mounted above the plate in the rear side of the motorcycle. The product is available in various color alternatives and combination of two colors.

- Effective warning light with highly efficient power LEDs
- UV and impact resistance optical polycarbonate lens in variety of color options
- High luminous intensity with specially designed lens
- 3-way warning feature (forward, right and left sides)
- Current and voltage limiting circuit
- Multiple flashing patterns
- Passive, controlled by external flasher or motorcycle cycle siren devices, EXPERT-WM, EXPERT-M

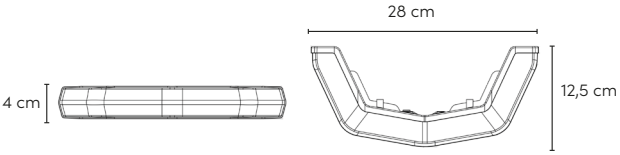

WRCS-M(VIVO)

WRCS-M is a wireless motorcycle remote control which allows using all functions wirelessly. In addition to other functions such as control of emergency warning lights and control of siren sounds and volume control, the remote control unit is equipped with a microphone to do public address and talk on radio, and a speaker to listen to radio. The headset connection port is available to allow performing the above mentioned functions without moving the hands from the handlebar. The product is small enough to hang on the clothes using its hook or put into a pocket.

HP-1006

The speaker HP-1006 is a compact size motorcycle speaker. The vibration and shock proof product is successfully designed to deliver to clear and powerful sound using neodymium magnet. Thanks to the elliptical structure the sound is effectively spread. The speaker complies with the international standards.

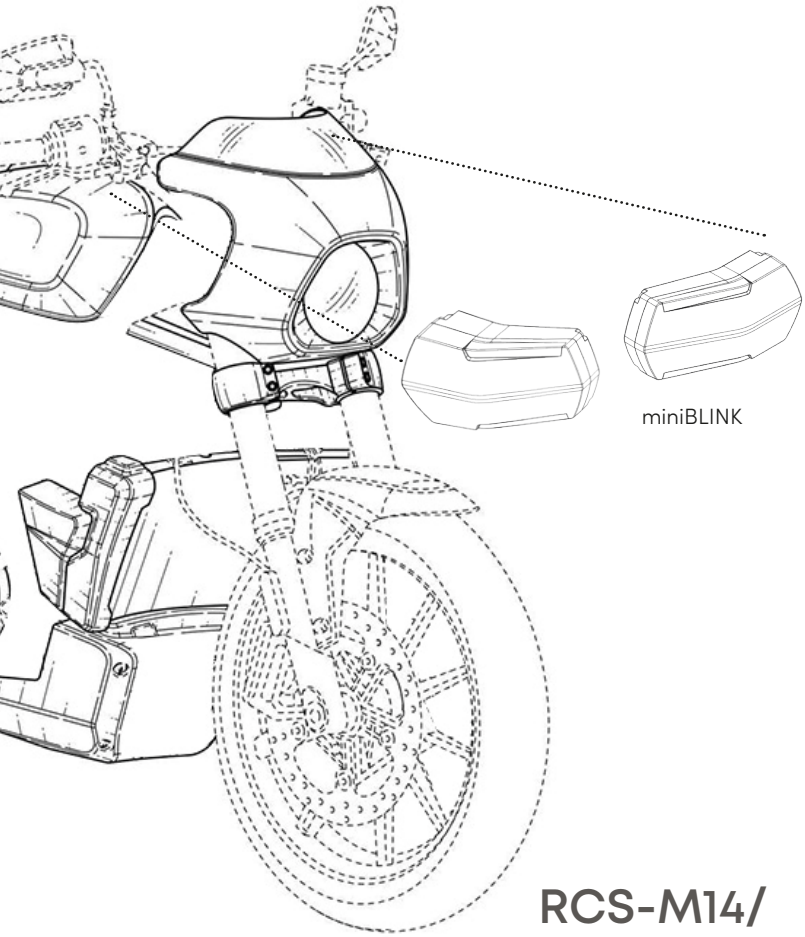

TWO-WAY RADIO CONNECTION KIT

The two-way radio connection kit enables the connection to the hand-held radio from the emergency warning system. The connection allows talking on and listening to a radio without actually taking the radio to the hand.

RCS-M14/ WRCS-M14 Handlebar Control Unit

RCS-M14 is a control unit that comes with the siren device EXPERT-M. The control unit WRCS-M14 is a part of the siren device EXPERT-WM. Both control units are ergonomic and mounted to the handle to control all functions of siren and warning lights with moving the hands away from the handlebar.

EXPERT-M/EXPERT-WM

The siren devices EXPERT-M and EXPERT-WM are compact and electronic sirens designed for motorcycle. The products are equipped with the functions of public address (optional for EXPERT-M), volume control (EXPERT-WM), emergency lights control, siren sound control, two-way radio connection (optional) and etc. EXPERT-M is offered with an ergonomic handlebar control unit which is well designed to control whole system without moving hands from the handlebar. The risk of accident has been successfully limited. In addition to the handlebar control unit, a pocket wireless control unit comes with EXPERT-WM. The handlebar control unit and wireless control unit perfectly work in harmony. All parts are well constructed to easily mount on the motorcycle.

miniBLINK

miniBlink is a front mount motorcycle warning light and available in variety of color options. The structure of the product is designed to be easily adjusted to different angles.

- Effective warning light with highly efficient power LEDs
- UV and impact resistance optical polycarbonate lens in variety of color options
- High luminous intensity with specially designed lens
- Horizontally and vertically adjustable plastic mounting kit
- Current and voltage limiting circuit
- Multiple flashing patterns
- Passive, controlled by external flasher or motorcycle cycle siren devices, EXPERT-WM, EXPERT-M

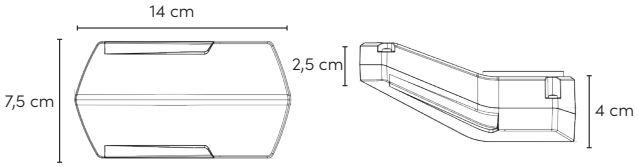

SIREN & PUBLIC ANNOUNCE DEVICES

e-SRN WIRED SIREN

The siren device e-SRN (wired) is an electronic and programmable siren device that has been recently developed. The product has been developed based on the new technology in the sector to bring together many features in a single smart device. The works of users are facilitated thanks to the applied features. The features of control of lightbar, siren and public address from a single control unit, unique control unit with color display, long spiral cable that connects the control unit to the siren box and aux options are of distinctive features. e-SRN fully complies the international standards and matches the requirements of all sectors such as police, ambulance and firefighting. The compact design of the product allows fast and easy installation in the vehicle interior.

Compact dimensions
100 WRMS sound power
Siren and light control with PA in a single control unit
Functional control unit
Easy installation and programming
Various siren sounds used worldwide
12V or 24V
Backlit
Color display
AUX feature

e-SRN WIRED-WIRELESS SIREN

The siren device e-SRN (wireless) is an innovative, electronic and programmable device, in short, a smart product gathering facilitating features that provide great convenience to the users while fulfilling their roles. The features of wireless remote control of lightbar and siren from distance, unique remote control unit with color display, the charging from single cable that is also used for communication, public address and control buttons are gathered in a single wired and wireless control unit and aux options are of distinctive features. e-SRN fully complies the international standards and matches the requirements of all sectors such as police, ambulance and firefighting. The compact design of the product allows fast and easy installation in the vehicle interior.

Compact dimensions
100 WRMS sound power
Siren and light control with PA in a single remote control unit
Functional wireless remote control unit
Easy installation and programming
Various siren sounds used worldwide
12V or 24V
Backlit
Color display
AUX feature

EXPERT-W100

The siren device EXPERT-W100 is an electronic siren device with handheld wired and wireless control unit. The most distinguishing feature of the product is the wireless control of all functions from distance. EXPERT-100 is equipped with the functions of public address, volume control, lightbar control, siren sound control, battery level and charge status LED indicator and etc. The wired and wireless modes shift automatically when the cable is connected or disconnected. Availability of simulation feature on the control unit allows the user to know the active flashing patterns without getting out of the vehicle to check the lightbar. The system is conveniently used at night time thanks to backlit of the buttons of control unit. The compact dimensions of the siren box makes installation easy in the vehicle.

EXPERT-100

The siren device EXPERT-100 is an electronic device with control functions of siren sounds, lightbar, public address, volume control and so on. The product comes with a control unit on which all controls are integrated and long spiral cable to connect the control unit to siren box. The control of all functions such as public address, volume control, control of siren sounds, lightbar on/off, changing of flash patterns and turning the rear part are conveniently performed using handy control unit. The LED indicators of the control unit simulate the flashing patterns of the lightbar to inform the user of lightbar flashing pattern. The keypad is backlighted for night use. Thanks to the compact dimensions the siren box is easily mounted in the vehicle.

EXPERT-ECO

The siren device EXPERT-ECO is a low cost electronic siren. Despite being economic model, the product is rich for functions. The control functions of siren sounds, lightbar on/off and flash patterns, public address, and volume control and many other features are offered. All of these functions are controlled using a single handheld control unit. Availability of simulation feature on the control unit allows the user to know the active flashing patterns without getting out of the vehicle to check the lightbar. The system is conveniently used at night time thanks to backlit of the buttons of control unit. The control unit is connected to the siren box with a long spiral cable. The small dimensions of the siren box makes installation easy in the vehicle.

EXPERT-ECO/W & EXPERT-ECO/D

The siren devices EXPERT-ECO/W and EXPERT-ECO/D are electronic devices with numerous features such as controlling of siren sounds, lightbar on/off and changing flash patterns, public address, and volume control and so on. EXPERT-ECO/W comes with a wired control unit and a wireless remote control key whereas EXPERT-ECO/D is offered only with wireless remote control key to meet the different needs. The wired control unit allows using all features of the product such as siren sounds, emergency lights and public address. Using wireless remote control key all features are controlled from distance except public address. Thanks to the compact dimensions the siren box is easily mounted in the vehicle.

SPEAKERS

HP-1810S

The speaker HP-1810S is a neodymium based speaker which produces clear and power output. The product is extremely durable and tough thanks to its metal outer part and offered with universal mounting bracket and ideal for use in all conditions. The speaker complies with the international standards.

HP - 1110

The speaker HP-1110 is a high sound and powerful speaker with neodymium magnet and low impedance. The product fully complies with the international standards. The speaker can be easily mounted in small spaces thanks to small dimensions, universal mounting bracket and metal outer parts. options.

HP-1110K

The speaker HP-1110K is chrome plated and glossy speaker. The small size and universal mounting bracket enable easy mounting. The neodymium magnet and low impedance allow the product performing well and producing strong and quality sound. The speaker complies with the international standards.

HP-1110F

The speaker HP-1110F is a low-cost speaker. The product has similar dimensions and mounting brackets as the speakers HP-1110 and HP-1110F and easily installed in the different parts of the vehicle. The speaker is manufactured of quality metal and ferrite magnetic parts. The speaker complies with the international standards.

HP-2010

The speaker HP-2010 has a compact shape and slim design. The speaker is highly durable and offered with universal mounting bracket and easily mounted in a small space. The product produces powerful output using neodymium magnet and is ideal for use in all conditions. The speaker complies with the international standards.

HP-1910S

Similar to the speaker HP-1405 the speaker HP-1910S is a compact and slim shape product designed to mount in a narrow space. The product delivers high and quality sound pressure using neodymium magnet and low impedance. The speaker complies with the international standards.

HP - 1405

The speaker HP-1405 is a slim design and compact size speaker with clear, powerful and effective sound output using neodymium magnet. The compact shape of the product makes the installation easy and fast in a tight space. The speaker complies with the international standards.

HP-1006

The speaker HP-1006 is a compact size motorcycle speaker. The vibration and shock proof product is successfully designed to deliver to clear and powerful sound using neodymium magnet. Thanks to the elliptical structure the sound is effectively spread. The speaker complies with the international standards.

TRAFFIC ADVISORS & VEHICLE INTERIOR LIGHTING

ARROW-30

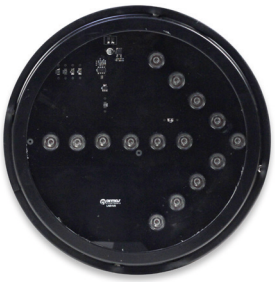

The traffic advisor ARROW-30 is a one-way LED arrow sign. The product is nicely designed to utilize to direct the traffic and therefore prevent any traffic accident. ARROW-30 is mounted at the back of the vehicle. Thanks to the power LEDs and effective optical lenses the product is successfully exploited even in the heavy foggy weather.
Diameter: 30 cm

ARROW-50

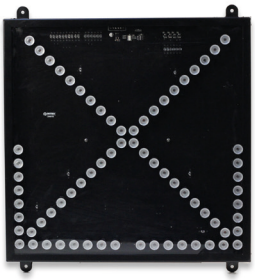

The traffic advisor ARROW-50 is a two-way LED arrow sign mounted at the back of the vehicle. The product is well designed to combine several arrow signs, left, right and no passing, in a single advisor. ARROW-50 is equipped power LEDs and in order to produce the powerful light intensity optical lenses are mounted on the LEDs. The advisor is suitable to use in all weather conditions.
Width: 50 cm
Height: 50 cm

ALF-1308 LED ARMATURE

ALF-1308 LED ARMATURE is for interior lighting of the vehicle, ambulance vehicles in particular. Besides white illumination LEDs, blue color LEDs are mounted for night mode lighting. Availability of various length options allows installing the light in different vehicles. The product is easily mounted thanks to its aluminum base. UV and shock resistant polycarbonate plastic cover.

ALS-0912 LED SPOT LIGHT

ALS 0911 is a LED spot light. The product is equipped with effective and efficient white LED color. The body of light is aluminum and designed to illuminate any direction thanks to its swivel feature of the head part.

armas

/armaselektronik
www.armaselektronik.com
#savelifetachnology